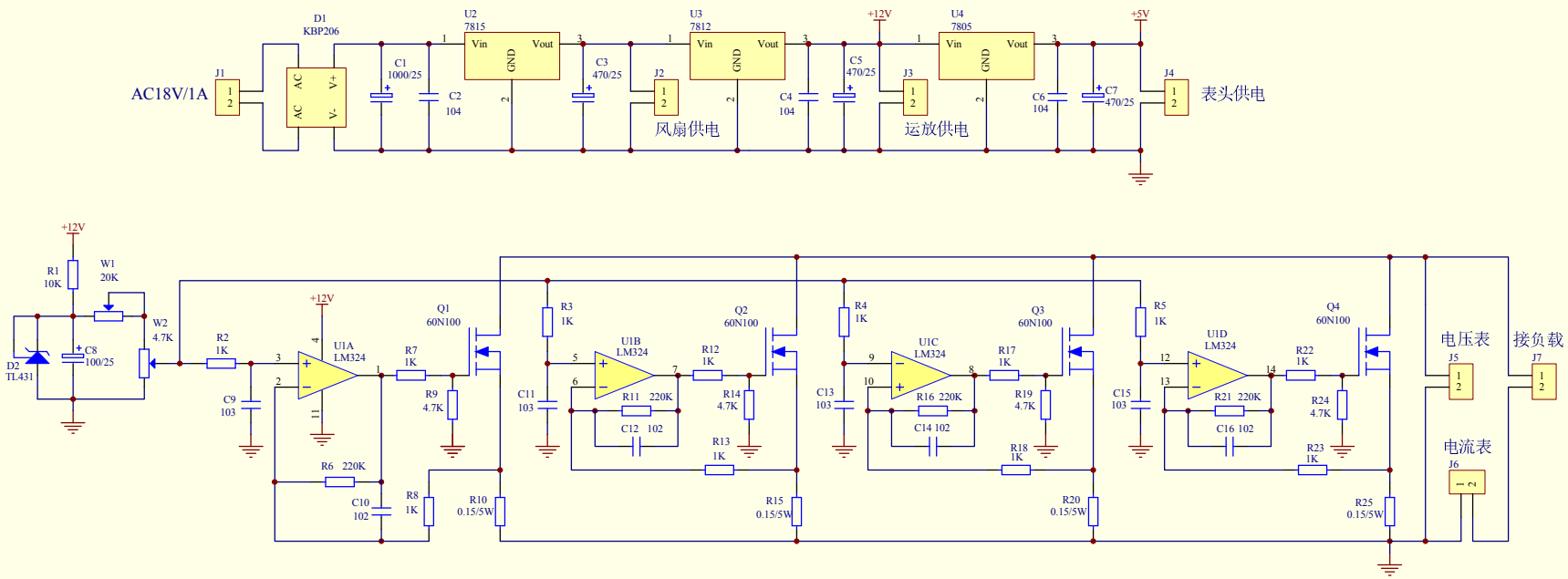

Title		
Size A3	Number	Revision
Date: 23-May-2019		Sheet of
File: F:\电子负载\DIY资料\电子负载1.ddb		Drawn By: